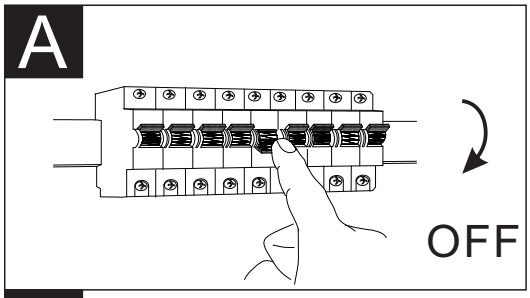

GLOBO LIGHTING

www.globo-lighting.com

67004 30H

B

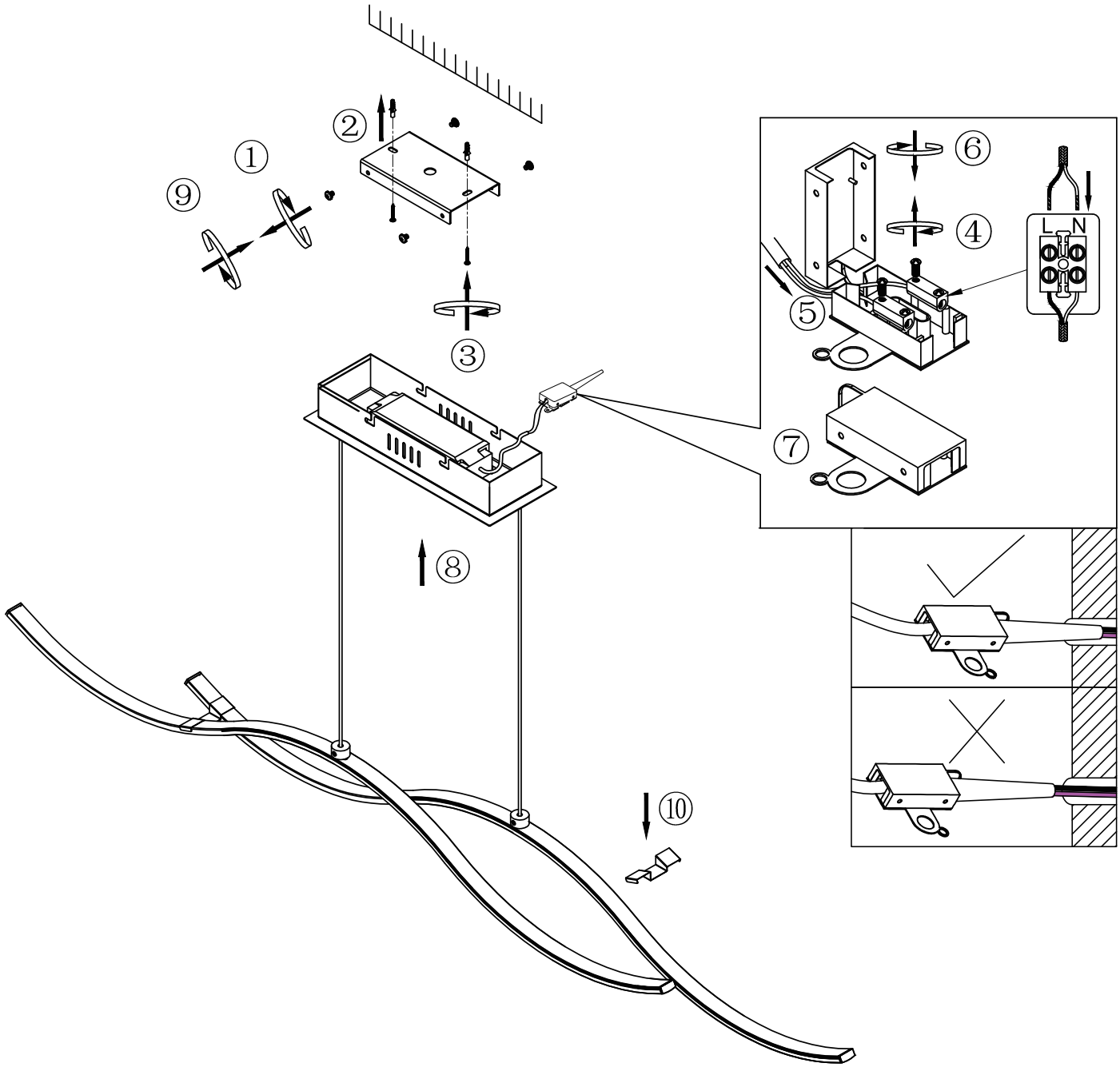

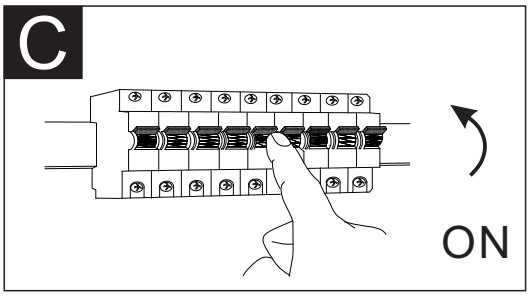

GLOBO Handels GmbH
St.Peter 38
A-9184 St.Jakob/Rosental